KEYBOARDS
& POINTING DEVICES
for the most demanding jobs

- 85 keys, silicone rubber
- IP65 sealing
- white backlighting

COMPACT SILICONE RUBBER KEYBOARD

85 key compact rubber keyboard. The backlit keys warrant for optimized performance while working in low-light environments. Panel mount and desktop version available.

MAIN FEATURES

- Compact layout, 85 full travel keys
- Dimmable backlighting at 8 levels by two dedicated keys (FN key + arrow up/down)
- Low power LED's warrant for a long life
- No external power supply necessary, keyboardport power sufficient
- White backlighting as standard, other colours on request
- Compact thickness

PANEL MOUNT VERSION

- M3 studs, 10 x M3 x 15 mm
- Dimensions : see page 2
- Weight : 600 grams
- Black anodised aluminium carrier plate

DESKTOP VERSION

- Dimensions : see page 3
- Weight : 700 grams
- Housing material: ABS

CONNECTIVITY

One 1,6 m shielded USB cable.

COMPASS SAFE DISTANCE

0,6 m

GENERAL TECHNICAL SPECIFICATIONS

Sealing:	IP65 sealed frontal
Keys:	85 rubber keys
Output:	1,6 m USB cable
Power requirements:	Directly from USB port
Operating temp.:	-0°C to +70°C
Storage temp. range:	-40°C to +85°C
Switch force:	300 grams +- 100 grams
Switch stroke:	1,5 mm
Lifetime switches:	1 million actuations

ORDER INFO

COUNTRY LAYOUT	DESKTOP VERSION	PANEL MOUNT
US Qwerty	**RKB85S0001-WLED**	**RKB85B0001-WLED**
Cyrillic Qwerty	**RKB85S0007-WLED**	**RKB85B0007-WLED**
French Azerty	**RKB85S0033-WLED**	**RKB85B0033-WLED**
Finnish Qwerty	**RKB85S0358-WLED**	**RKB85B0358-WLED**
Danish Qwertz	**RKB85S0045-WLED**	**RKB85B0045-WLED**
German Qwertz	**RKB85S0049-WLED**	**RKB85B0049-WLED**
Chinese Qwerty	RKB85S0086-WLED	RKB85B0086-WLED

NSI bv • Kapittelstraat 18 • 3740 Bilzen-Hoeselt • Belgium
+32 (0)89 51 90 00 • info@nsi-be.com

KEYBOARDS
& POINTING DEVICES
for the most demanding jobs

DIMENSIONAL DRAWING

Panel mount

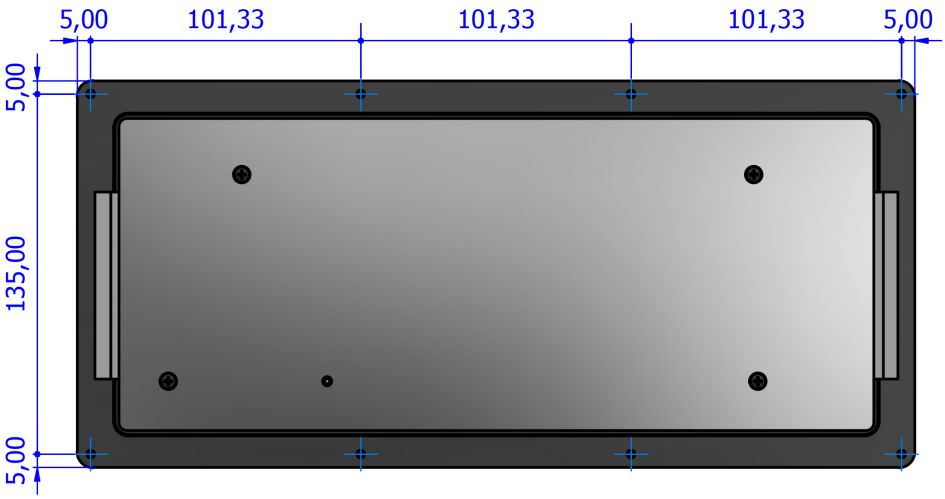

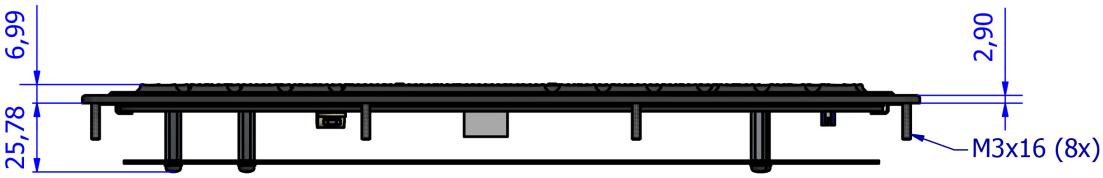

NSI bv • Kapittelstraat 18 • 3740 Bilzen-Hoeselt • Belgium
+32 (0)89 51 90 00 • info@nsi-be.com

KEYBOARDS
& POINTING DEVICES
for the most demanding jobs

DIMENSIONAL DRAWING

Desktop version

NSI bv • Kapittelstraat 18 • 3740 Bilzen-Hoeselt • Belgium
+32 (0)89 51 90 00 • info@nsi-be.com