

panel mount



- 104 keys, full travel
- 38 mm ergonomic trackball
- IP65 sealing

FULL TRAVEL KEYBOARD WITH ERGONOMIC TRACKBALL

This high quality full travel keyboard is designed for comfort over prolonged periods of use. A reliable, user-friendly solution for all applications which require very accurate pointer control and easy data input.
It ensures durability and visibility in low-light environments. With a high-spec rubber dome key mechanism, 10 million actuations, and illuminated keys. The Backlighting is BUS powered over USB, customizable via PWM signal. The keyboard layout is customizable, and the aluminium construction provides robustness and protection. The integrated trackball module utilizes patented optical technology and IP rated mechanical switches, offering precise cursor control.

MAIN FEATURES

- Compact layout, 104 full travel keys
- 38 mm waterproof ergonomic trackball with hall-effect scroll wheel
- Sealing to IP65
- Removable ball for easy cleaning

PANEL MOUNT VERSION

- Front of panel mounting by Ø3.4mm countersunk holes
- Metal protection plate on the backside, it protects the mechanical- and electrical components.
- Added silicon sponge seal for perfect sealing into the user's panel
- Dimensions: see page 2
- Weight: ±1100 gram

GENERAL TECHNICAL SPECIFICATIONS

KEYBOARD

Sealing	IP65 sealed
Keys	104 full travel keys 3 mm travel and 0.49N - 0.97N operating force
Pointing device	E38 ergonomic trackball
Output	±1,6m USB cable
Power requirements	Directly from USB port
Operating temp.	0°C to +60°C

TRACKBALL

Housing material	PC/ABS
Housing colour/finish	Black/fine-textured finish
Base plate material	Aluminium
Base plate finish	Bead blasted & clear anodised
Ball size/material	Ø38.1mm (1.5")/Epoxy resin
Tracking force	20 grams nominal – damper ring seal 30-80 grams – PTFE seal
Ball load	100N (10Kg) maximum downward pressure for 2 minutes @ 20°C
Resolvable ball speed	30 IPS (inches per second)
Tracking engine	Infra-red optical navigation technology
Removable ring	PC/ABS, black

SCROLL WHEEL

Wheel diameter	Ø25mm
Wheel material	PC/ABS
Wheel colour	Grey
Encoding technology	Hall effect
Magnet strength	N42
Detent-scrolling force	30 grams nominal
Switch actuation force	275 ± 125 grams force

LEFT/RIGHT SWITCH

Switch actuation force	250 ± 100 grams force

ORDER INFO

COUNTRY LAYOUT	PANEL MOUNT VERSION
US Qwerty	**KFTE104N0001USB**
Swedish Qwerty	**KFTE104N0046USB**
Korean Qwerty	**KFTE104N0082USB**
Turkish Qwerty	**KFTE104N0090USB**

The company reserves the right to alter without prior knowledge the specification or design of any standard product or service.

NSI bv • Kapittelstraat 18 • 3740 Bilzen-Hoeselt • Belgium
+32 (0)89 51 90 00 • info@nsi-be.com

DIMENSIONAL DRAWING

PANEL MOUNT VERSION

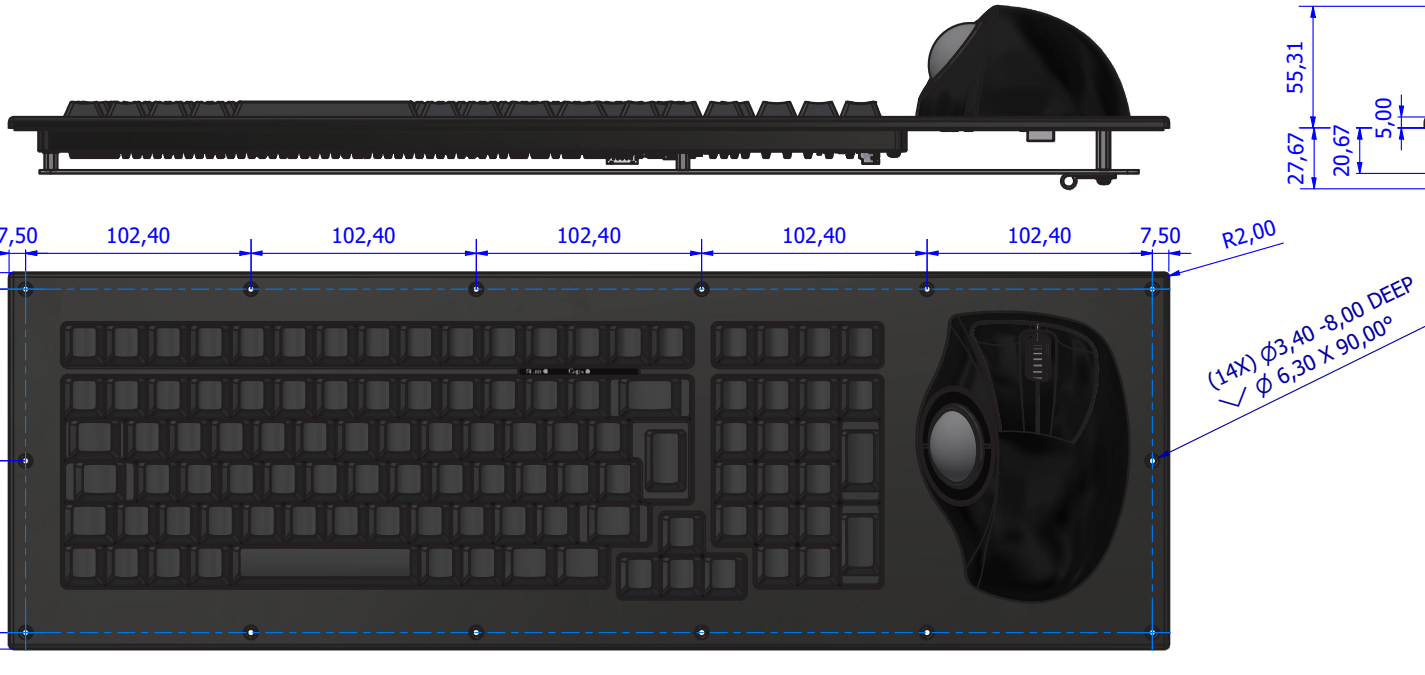

Proposed cutout dimensions

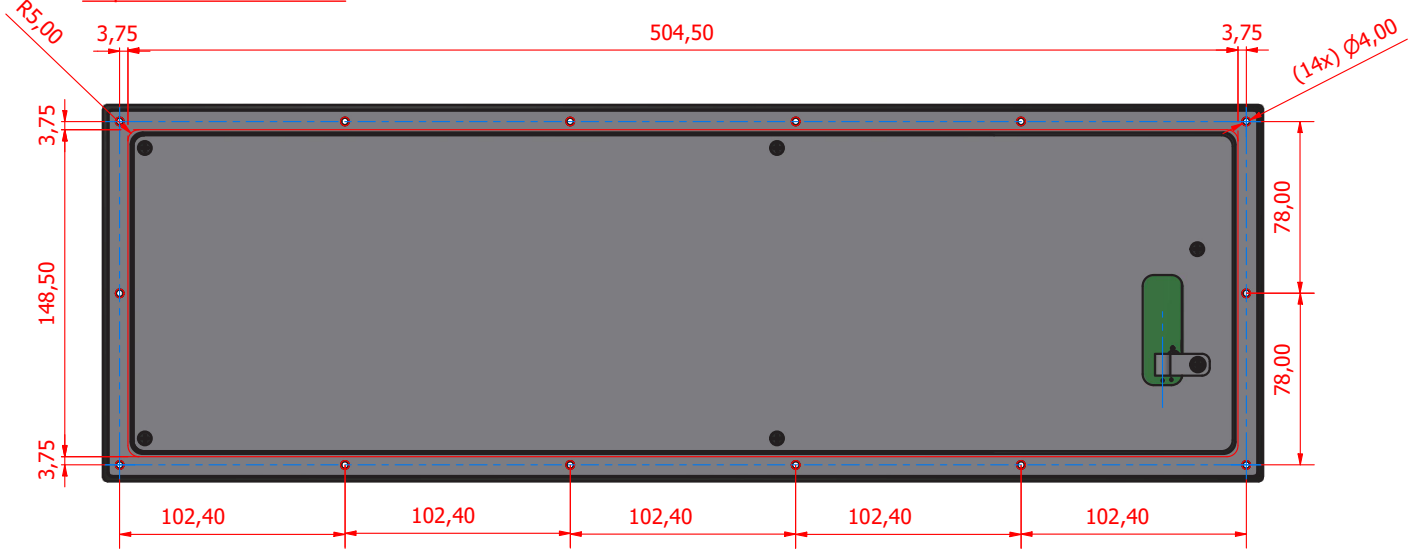

The company reserves the right to alter without prior knowledge the specification or design of any standard product or service.

NSI bv • Kapittelstraat 18 • 3740 Bilzen-Hoeselt • Belgium
+32 (0)89 51 90 00 • info@nsi-be.com